ROBINSON WILLEY

FIREGEM VISA 2
WITH SAFEGUARD
AND FIREGEM VISA 2 DELUXE WITH SAFEGUARD

Installation & Servicing Instructions

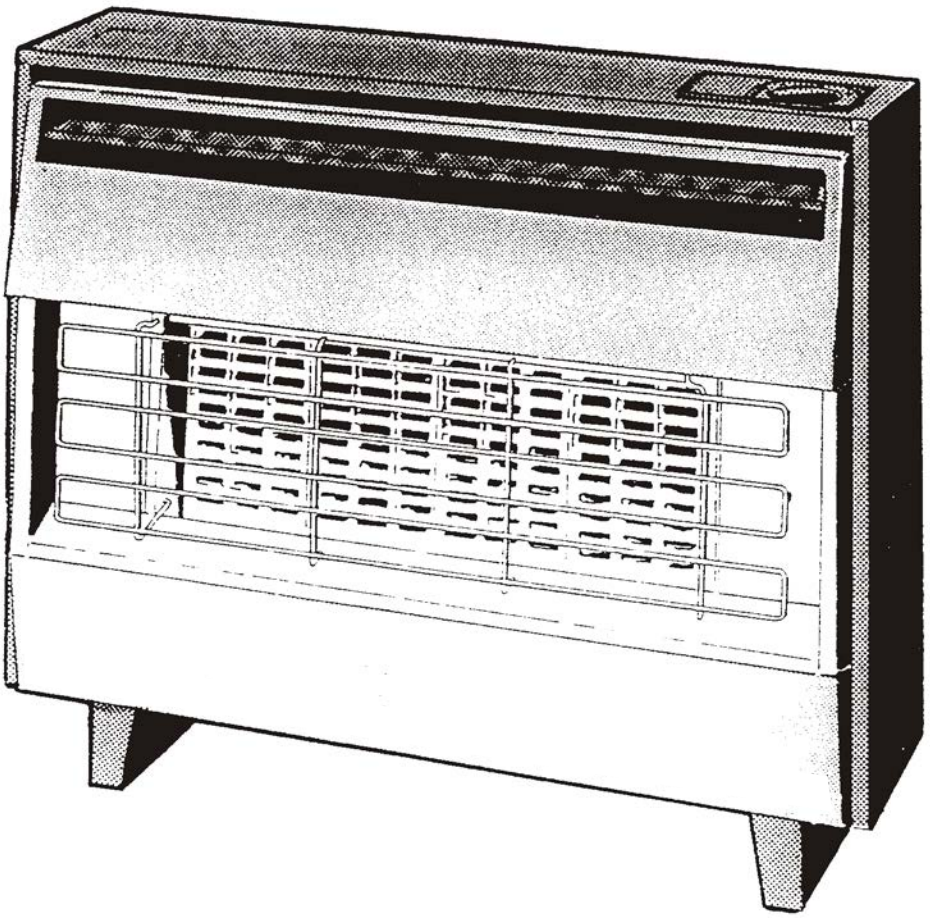

THIS FIRE IS FOR USE WITH NATURAL GAS ONLY
Cat I_{2H} (G20) at 20mbar in GB and IE
IT MUST BE INSTALLED BY A COMPETENT PERSON AS STATED IN THE
GAS SAFETY (INSTALLATION AND USE) REGULATIONS 1994 (AS AMENDED)

Firegem Visa 2 32 689 34 Firegem Visa 2 Deluxe 32 689 36
Firegem Visa 2 (Black) 32 689 35 Firegem Visa 2 Deluxe (Black) 32 170 03

LEAVE THESE INSTRUCTIONS AT OR NEAR THE USER'S METER FOR USE ON FUTURE SERVICE CALLS

INTRODUCTION

It is the law that all gas appliances are installed by competent persons, e.g. CORGI dealers in accordance with the Gas Safety (Installation and Use) Regulations 1994 (as amended) and the rules in force.

Failure to install correctly could lead to prosecution. It is in your interest and that of safety to ensure that the law is complied with. The installation must also be in accordance with these installation instructions all the relevant parts of the Building Regulations, The Building Standards (Scotland) (Consolidation) Regulations, and other relevant Building Regulations and all relevant recommendations of the following British Standard Codes of practice:

1. BS 5871 : Part 1 : 1991
2. BS 5440 : Part 1 : 1990 and Part 2 : 1989
3. BS 6891 : 1988 (Formerly CP331 : Part 3)

N.B. Ensure that any shelf of combustible material will be at least 114mm (4.5in) above the top of the installed fire and that it is not more than 150mm (6in) deep. Ensure also that there is at least 3mm (1/8in) clearance either side of the fire.

The fire is suitable for use with lightweight surrounds whose continuous working temperature is not less than 100°C.

IMPORTANT: When considering fitting any heating appliance or wallpapering a room in which one is fitted, if blown vinyl or heat sensitive wallpapers are used near the heat source then they may become heat damaged or discoloured especially just above the fire.

APPLIANCE DATA

	Firegem Visa 2	*Firegem Visa 2 Deluxe*	
Hieght:	540mm (21.25in)*	556mm (22in)*	*With levelling screws retracted
Width:	660mm (26in)	695mm (27.4in)	
Depth:	196mm (7.7in)	198mm (7.8in)	
Weight:	21.8kg (48lb)	23kg (50.5lb)	

Heat Input (gross):	
Maximum	6.04kW (20600Btu/h)
Minimum	1.55kW (5290Btu/h)
Heat Output:	
Maximum	3.8kW (12965)Btu/h)
Pressure Setting:	Cold 17mbar ± 1 (6.8in w.g. ± 0.4)
Supply Pressure:	20mbar (8in w.g.)
Injector:	BRAY RY/220
Burner:	Aerated Duplex
Ignition:	Piezo Unit (integral with gas tap)
Gas Tap:	Duplex Plug Type (with flame supervision device)
Minimum Fireplace Opening:	438mm (17.25in) high, 305mm (12in) wide
Inlet Connection:	Rp1/4 (1/4BSP)
Pilot/ODS:	OP NG 9031

PREPARE THE GAS FIRE

NOTE: This fire is suitable for installation directly onto a combustible wall provided an area of 460mm (18in) high and 405mm (16in) wide of combustible material is removed behind the fire.

CHECK THE CHIMNEY

1. The chimney must be inspected to ensure that:

   (a) It serves only one room.
   (b) It is not blocked with paper, rubble etc.
   (c) The base of the flue is clear of debris.

2. Where another fuel has been used, the chimney must be swept.

3. Any restriction such as damper, register plate, etc. must be removed.

4. Any underdraught ventilation or additional air supply entering the fireplace, or the hearth must be completely sealed off.

Note that whether the fire is hearth or wall mounted in a conventional chimney, the dimensions of the space behind the closure plate must meet the following requirements.

(a) The fire flue spigot/spigot extensions must pass through the closure plate and have a minimum clearance of 50mm (2in) between its open end and the nearest obstruction. There must also be a minimum clearance of 165mm (6.5in) between the back of the closure plate and the back of the catchment space (See Fig. 1).
NOTE: Where a spigot extension is fitted it may be extended upto 152mm (6in) from the back of the fire. A spigot extended to this specification is available from Robinson Willey, Part No. 991134. It must be cut down to suit the application.

(b) The catchment space below the flue spigot should be as deep as possible and must not be less than 250mm (10in) measured from the bottom of the flue spigot to the bottom of the catchment space, or to the top of any "bricking-up" of the bottom of the fireplace opening, whichever is the least (See Fig. 1).

(c) The front opening must be at least 305mm (12in) wide and 438mm (17.25in) high if hearth mounted and 413mm (16.25in) height wall mounted. There must be 10mm (3/8in) flat around this opening to ensure the closure plate can be effectively sealed).

(d) The closure plate air relief must not be obscured by any "bricking-up".

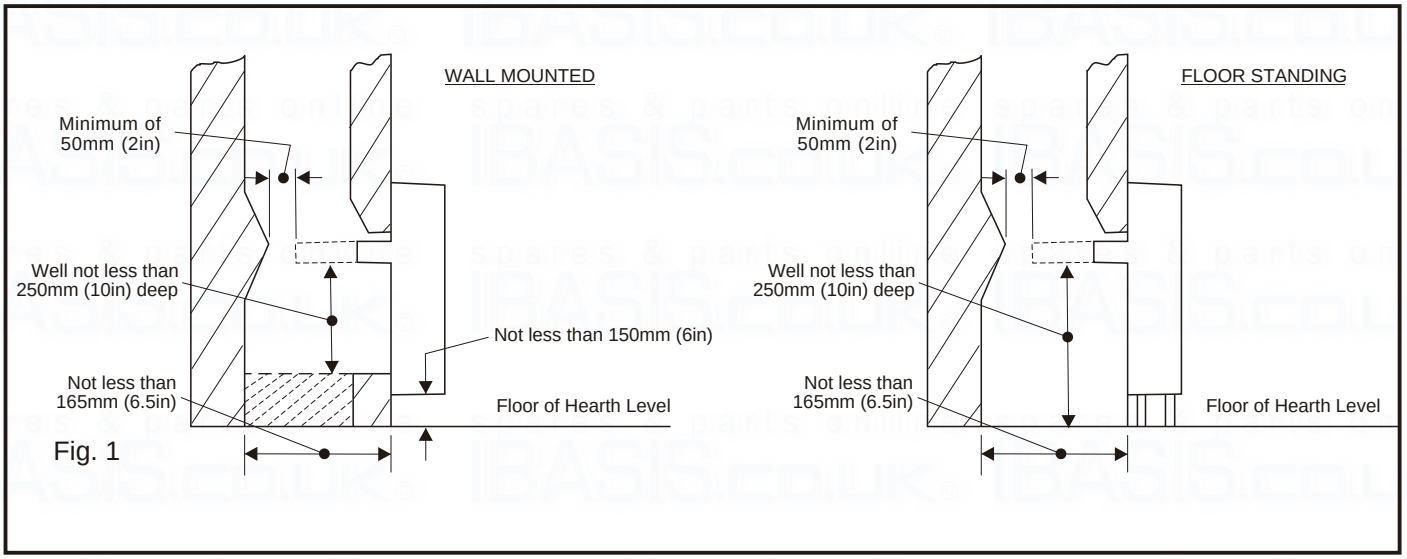

Fig. 1

FIRE PACKAGING

The fire is despatched together with a closure plate, and cooler plate packed behind the fire back. The spigot consists of two identical pieces and is slotted into the bottom fitment of the pack with the restrictor. The control knob adaptor is also located in the bottom fitment.

REMOVAL OF FRONT PANEL

Remove the front panel by lifting upwards to clear the lower supports and then pulling forward and downward away from the fire.

REMOVAL OF THE RADIANTS AND PACKING

Remove the cardboard packing retaining the radiants. Remove the radiants by sliding upwards and outwards base first, and place to one side, in a safe place. Remove the paper packing in the radiant support plate.

FIT THE CLOSURE PLATE

1. Fit the closure plate and seal to the fire surround along the edges, but ensure that the relief opening is NOT covered. If the fireplace opening is too large for the closure plate to fit snugly, the closure plate must be extended to suit.

   The minimum fireplace opening when wall mounting will have an actual height of 413mm (16.25in), and the top of this opening must be at least 510mm (20.1in) above the floor.

   The closure plate must be fitted but first cut off the bottom 25mm (1in) and cut a new relief opening 50mm (2in) x 38mm (1.5in) along the bottom edge in the case of a normal brick chimney and 102mm (4in) x 50mm (2in) in the case of a pre-cast flue installation. (It is sufficient to make two new vertical cuts, and bend back the flap).

2. Apply a lighted match, lighted paper or smoke match to the spigot opening in the closure plate. Observations of up or down draught may be facilitated by masking off part of the opening to approximately 50mm x 50mm (2in x 2in). Observe if there is any up or down draught through the spigot opening, if there is a definite flow into the spigot opening, proceed with fitting the fire. Any tendency to down draught must be corrected. If no flow is indicated, heat the chimney with, for example, a roll of burning paper or a blow lamp for two or three minutes by pushing through the spigot opening. Then re-check for flow through the spigot opening. If no definite flow is indicated, the chimney may be blocked. DO NOT FIT THE FIRE, and report to your supervisor.

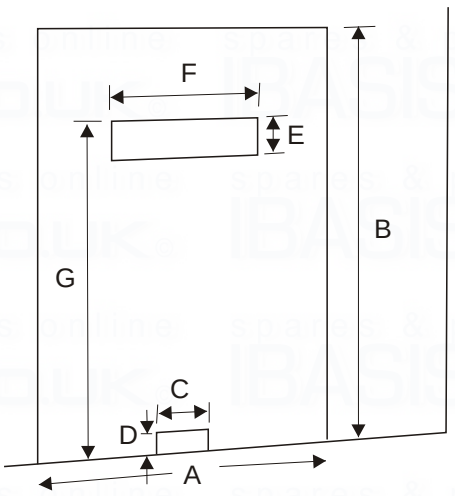

A 460mm (18.1in)
B 660mm (26in)
C 50mm (2in)*
D 38mm (1.5in)*
E 40mm (1.6in)
F 240mm (9.4in)
G 415mm (16.3in)

*For pre-cast flues
C 102mm (4in)
D 50mm (2in)

Fig. 2

FIT FLUE SPIGOT AND ALSO RESTRICTOR IF REQUIRED

STANDARD 228mm x 228mm (9in x 9in) BRICK CHIMNEY

The minimum equivalent height for this fire is 3m (10ft) measured from hearth level.

If over 4.3m (14ft) in height, with good draught, the spigot restrictor (Fig. 3) must be fitted as follows:

The four screws for fitting the flue spigot are already fitted around the flue outlet. Remove the two top screws. LOOSEN ONLY the bottom screws and stand the restrictor on them (with the words "spigot restrictor" uppermost) so that the slots fit over the screw heads. Fix the spigot restrictor and upper part of the spigot and secure with the top two screws.

Remove the bottom two screws and fix the other part of the spigot, trapping the bottom of the restrictor as the screws are tightened..

N.B. 1: The spigot restrictor must NOT be used if the fire is to be installed in conjunction with a back boiler.
N.B. 2: The spigot restrictor must NOT be used if the chimney height is less than 4.3m (14ft) or if poor draught is suspected.

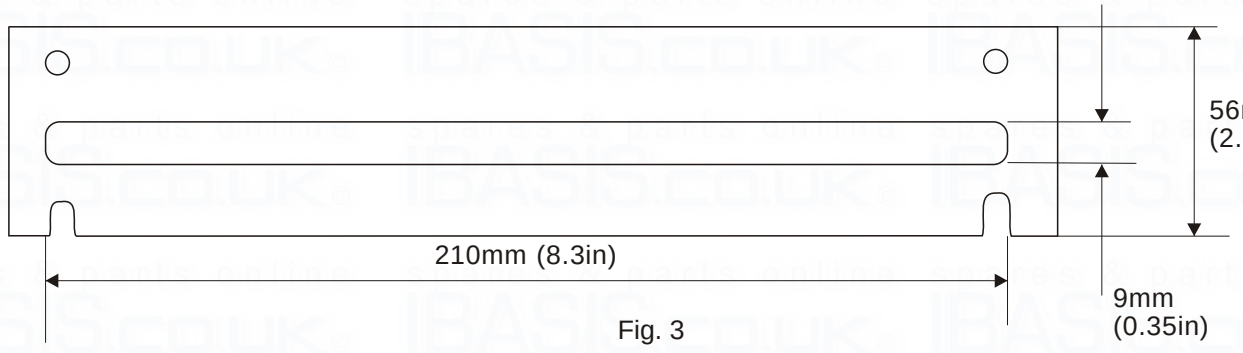

Fig. 3

PRE-CAST FLUES

(a) The fire is suitable for fitting into properly constructed non-impeded pre-cast flues of minimum cross section 198mm x 67mm (7 3/4 x 2 5/8in) which comply with the recommendations of BS 5440 : Part 1 and BS 1289, and have a minimum equivalent height of 3m (10ft).

N.B.: It is emphasised that any mortar fangs between the blocks are not extended into the flueway. If raking blocks are used they must be fitted according to the manufacturer's instructions and mortar not allowed to drop down and accumulate in the raked portions.

(b) The air relief opening in the closure plate must be increased to 102mm x 50mm (4in x 2in) as shown by the indented markings. It is sufficient to make the two vertical cuts and bend the tag back.

(c) The spigot restrictor must NOT be used.

(d) The flue cooler plate, supplied, must be fitted to the back of the closure plate. Bend it along the two lines to form the shape shown in Fig. 4 and push the tags through the slots in the closure plate. Bend the tags over or twist them to hold the cooler plate firmly against the back of the closure plate.

N.B.: The top edge of the cooler plate will be 9mm (0.35in) below the top edge of the spigot opening in the closure plate (Fig. 4A).

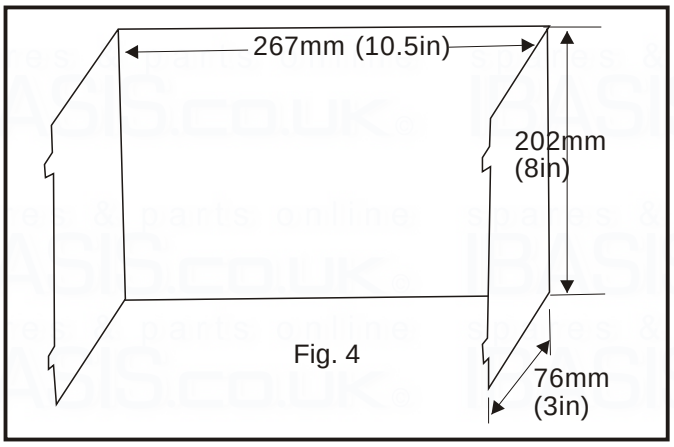

Fig. 4

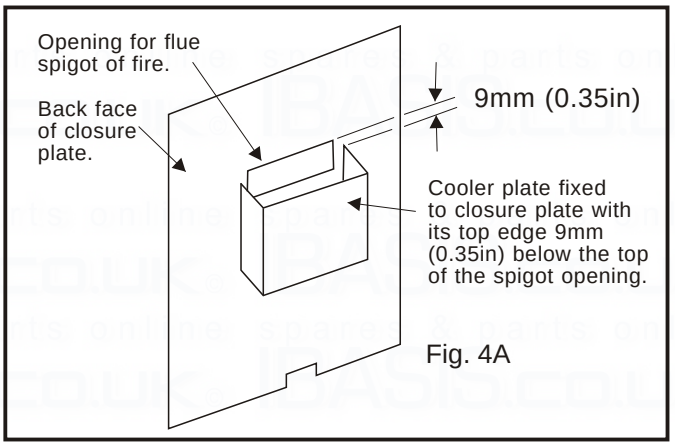

Fig. 4A

HEARTH FITTING

The fire must stand on a non-combustible hearth at least 13mm (1/2in) thick and measuring at least 305mm (12in) deep and 710mm (28in) wide (with the fireplace opening central). The top surface of the hearth should preferably be 50mm (2in) above floor level to discourage rugs or carpets being placed over it. Ensure that the fire is stable.

Levelling screws are fitted in the feet and can be adjusted to take up any irregularities in the hearth, but note that they are not to be used to increase the general height of the fire. The fire must not be fitted directly on a carpet or floor of combustible material. In such a case, a purpose design non-combustible plinth must be provided.

WALL MOUNTING (to a non-combustible wall)

When required, it is possible to wall mount this fire. For this purpose, keyhole slots are provided in the back of the case on either side of the flue spigot, together with screw holes in the case (See Fig. 5). These holes are suitable for size 12 Rawplugs fixing using 38mm (1.5in) No. 10 round head screws. If the lower right handhole is difficult to access, the slotted hole above it may be used.

The bottom of the fire must be at least 150mm (6in) from the floor. The legs are held to the bottom of the case by two screws and should be removed when the fire is wall mounted.

NOTE:
1. When tightening the wall fixing screws, it is not intended that the back of the fire be forced to touch the wall.
2. Ensure that the opening in the wall is large enough to allow chimney refuse to collect behind the closure plate without obstructing the fire flue spigot, and air relief.
3. In the case of a pre-cast installation, remember to fit the cooler plate to the closure plate.

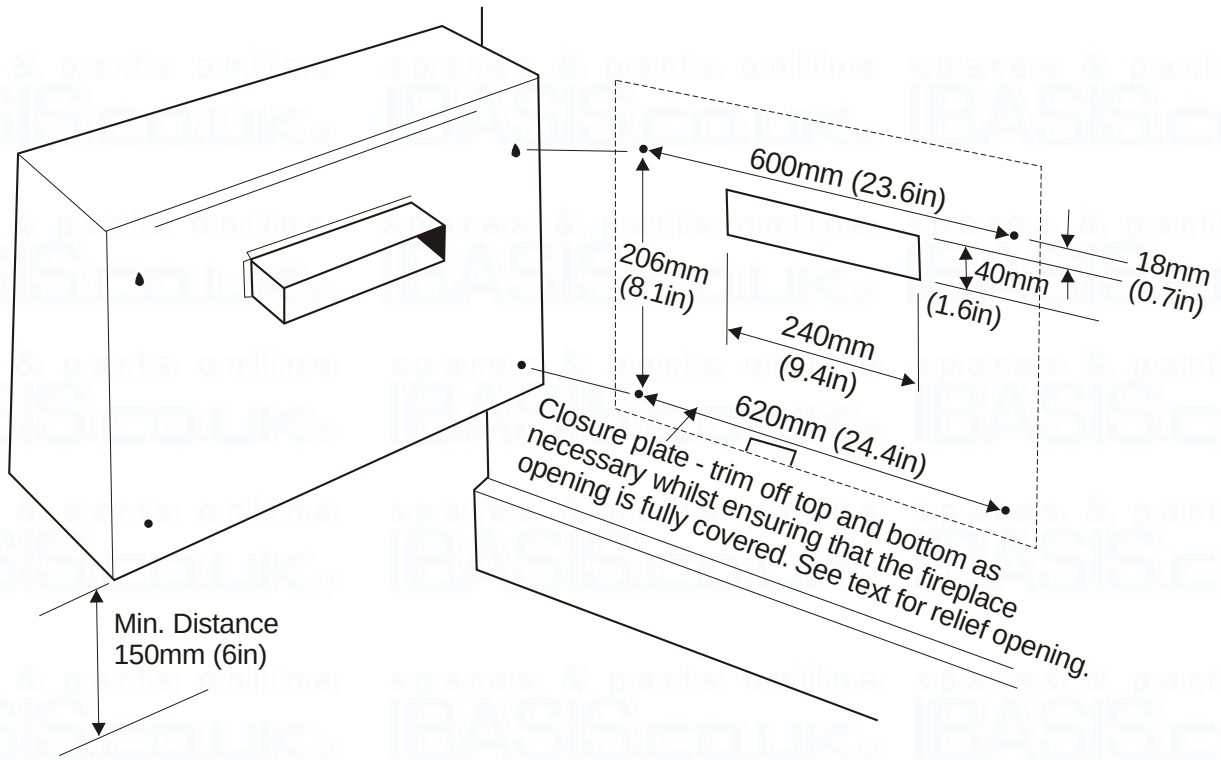

Fig. 5

CONNECT TO GAS SUPPLY

1. MAKE GAS CONNECTION

The gas inlet pipe and inlet union are readily accessible under the base of the fire. Provision is made for right hand, left hand or concealed connections by rotation of the elbow prior to tightening the flared tube and nut connection. The elbow has a Rp1/4 (1/4in B.S.P.) thread for the supply pipe.

2. TEST FOR GAS SOUNDNESS (BS 6891)

Pressure test the installation for gas soundness.

3. TEST FOR CORRECT BURNER PRESSURE

Remove the pressure test point sealing screw and attach a pressure gauge to the test point. This test point is located on the gas tap on the right hand side of the appliance. Turn on the gas which will light via the piezo unit and check that the pressure is 17mbar (6.8in w.g.) ± 1 (0.4in w.g.). If it is not, take the pressure at the meter to determine if there is a restriction in the house carcassing, or whether other appliances served by the same meter are starving the gas fire.

With the fire alight test all joints for gas soundness using a suitable soap solution.

Check that the flames are uniform and undistorted. Turn off the gas, remove the pressure gauge and replace the pressure test point sealing screw. The correct heat input when hot is 6.04kW (20600Btu/h). The injectors are identified 220.

4. CHECK IGNITION

Operate the gas tap/piezo unit several times to ensure that the pilot lights correctly.
N.B.: The spark electrode should be positioned between 3.0mm and 5.0mm above the thermocouple tip on the pilot assembly. (Refer to Section 5 of Servicing Instructions).

5. REPLACE RADIANTS AND CHECK OPERATION

Replace the radiants, top first, ensuring they locate down behind the upturned flange of the radiant support and then re-check ignition and cross lighting. Check the operation of the fire at all tap settings. Replace front panel.

6. TEST FOR SPILLAGE (See Fig. 6)

Light the fire and leave on at full rate. Close all doors and windows in the room and after the fire has been alight for five minutes insert a lighted smoke match under the firebox canopy at an upward angle and 25mm (1in) inside. If the smoke is drawn into the fire, the installation is satisfactory. If spillage is absent, installation is acceptable; if it persists, DISCONNECT THE FIRE AND REPORT TO YOUR SUPERVISOR.

If there is a fan in the room or in an adjacent room, repeat the test with the fan running and any door between the fire and the fan left open

7. TEST OPERATION OF F.S.D.

After the spillage test turn the gas off at the service cock, wait 3 minutes then turn the service cock on again. If the gas has stopped flowing the F.S.D. is functioning satisfactorily.
NOTE: You may hear the F.S.D. valve close within 3 minutes, but always check that the gas has stopped flowing.

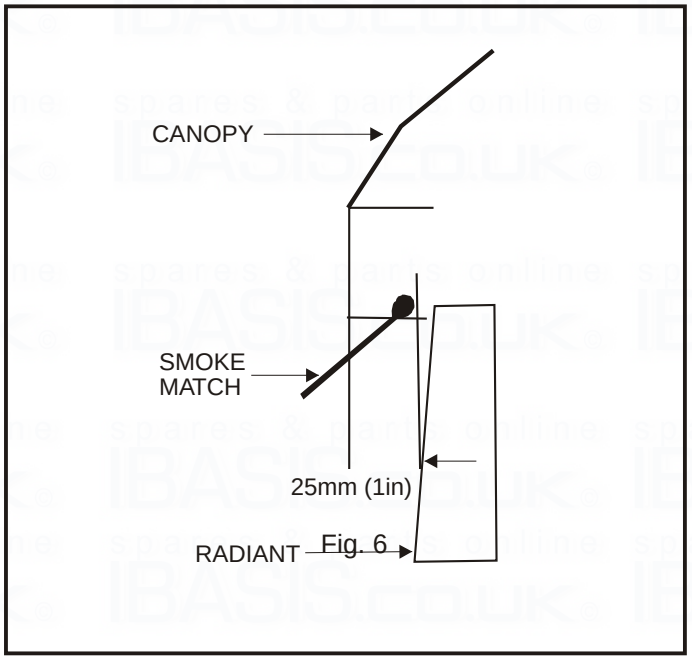

Fig. 6

MAKE SURE THE USER KNOWS THAT

1. The front panel is readily removable.
2. The tap must be pressed down before turning anti-clockwise and hold down for 10 seconds.
3. The tap should be turned on slowly, and the spark igniter acts automatically during operation of the tap.
4. The fire can be lit with a match if necessary. To light it, first remove the front panel then light the match and apply to the pilot, then turn the tap to pilot position holding down for 10 seconds after lighting.
5. That the fire and its installation should be serviced and inspected regularly or as recommended by the local gas authority for continuing safe operation.
6. Inform the user that lighting instructions are provided in the lift up lid of the bezel.
7. The control knob adaptor may be fitted to assist with the operation of the fire (See Fig. 7). Leave with the User if not fitted.

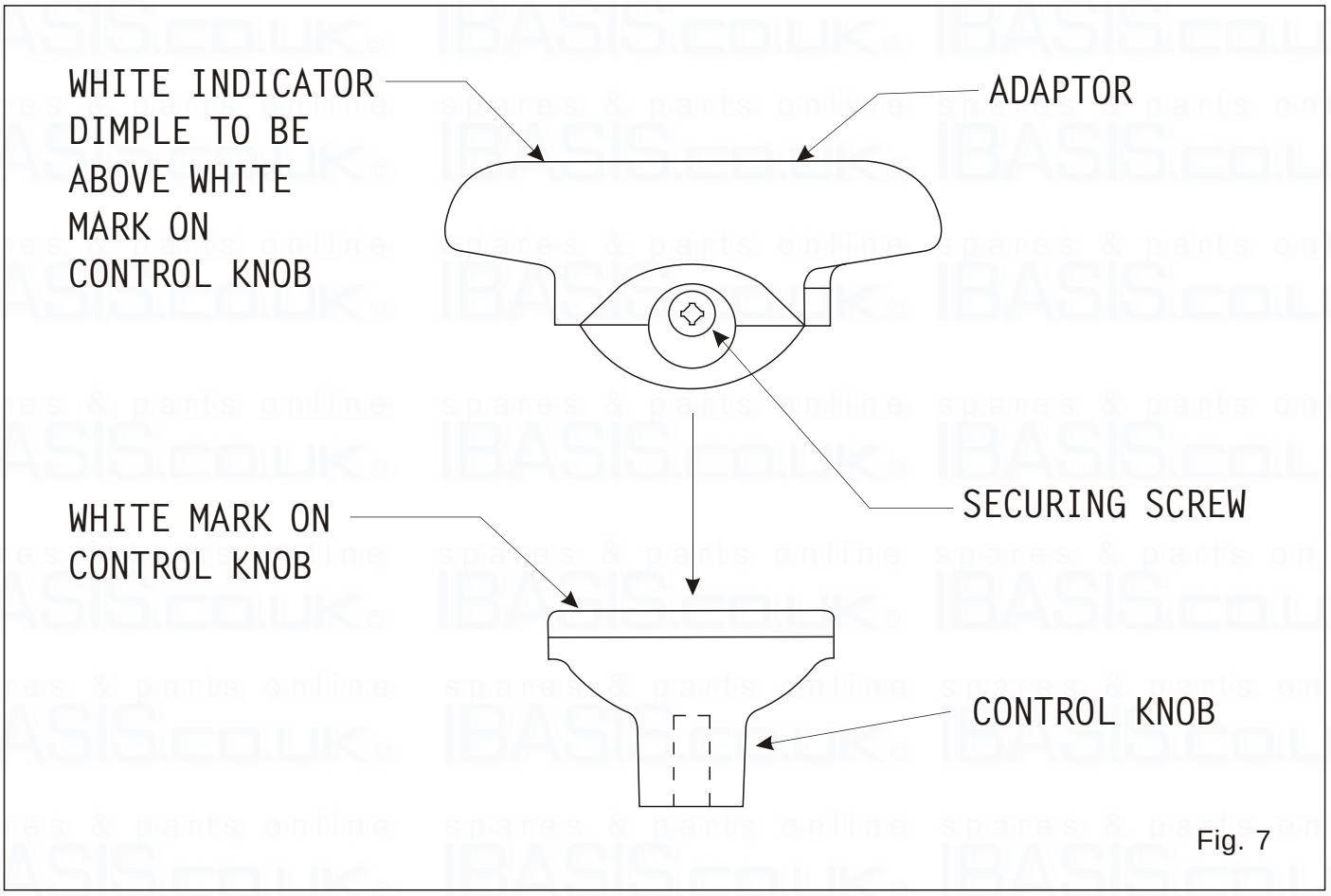

Fig. 7

NOTES ON SERVICING

Access to all connections, radiants, injectors etc. is given by removing the front panel. The panel is removed by lifting upwards to clear the lower supports and then pulling forward and downward away from the fire.
NOTE: For thermocouple or electrode replacement it is necessary to exchange the pilot assembly.
N.B.: For problems with small or no pilot flame always try a new filter first.
For problems with the piezo unit the gas tap assembly must be replaced.

IMPORTANT: ALWAYS TEST FOR GAS SOUNDNESS AFTER SERVICING OR EXCHANGING ANY COMPONENT!

1. GAS TAP

Removal:

Turn off the main gas supply to the fire and remove the front panel. Remove the lower spring clip securing the spindle extension. Disconnect the spark lead at the generator. Undo the nut securing the thermocouple at the bottom of the gas tap and pull out. Disconnect the union nut at the inlet to the fire and disconnect and remove the pilot pipe (don't lose the pilot filter which may fall). Remove the large nut securing the gas tap to the burner at the lower injector. Disconnect the inlet pipe clamp and withdraw the tap and inlet pipe.

Servicing:

To gain access to the plug, remove the two screws and washer holding the niting plate/piezo unit to the tap body. When removing the niting plate, care must be taken not to lose the tap spring. The plug can now be removed. When re-assembling the plug make sure the plug is replaced the right way round and that the tap works correctly. Turn the tap to the "OFF" position. Note that one of the screws holding the niting plate is difficult to access and you may decide just to replace the tap instead of attempting servicing.

Replacing:

If a new tap is being fitted then ensure that the tap is turned "OFF" before fitting and transfer the inlet pipe from the old tap. Secure the gas tap to the burner with the large nut. Re-connect the pipe clamp and gas inlet. Ensure the indicator pip on the control knob is facing "OFF" before re-connecting the spindle extension. Re-connect the spark lead. Re-connect the pilot pipe with the filter at the pilot end.

NOTE: The piezo generator is not replaceable as a unit.

2. REMOVAL OF BURNER

Turn off the main gas supply to the fire and remove the front panel. Remove the lower spring clip securing the spindle extension, disconnect the union at the inlet to the fire and remove the pipe clamp on the inlet. Remove three nuts, two on the left side of the firebox which hold the burner in position. Remove the burner and the gas tap as an assembly. Take care not to lose the spacer from the right hand burner stud which is loose. Detach the pilot burner from the main burner. Remove the large nut securing the gas tap to the burner at the lower injector.

N.B.: When re-assembling ensure that the loose burner spacer is fitted to the right hand burner stud.

3. INJECTORS

Unscrew the injectors from the tap and replace with new injectors.

4. PILOT FILTER

Remove the pipe connecting the pilot to the gas tap (2 nuts). If the pilot filter does not fall from the pilot entry prise it out with a pin. Insert a new pilot filter (it may be convenient to balance the new filter on the feed pipe and insert the filter and pipe simultaneously). Re-tighten the nuts and check operation.

5. PILOT ASSEMBLY

The pilot is an atmosphere sensing device and must be replace as a complete unit. Repair must not be undertaken.

NOTE: If the fire keeps going out or exhibits signs of nuisance shut off, check the operation of the pilot as follows:-

(a) Inspect the pilot flame, if suspect check gas supply. Clear blockage if necessary, if flame is still suspect replace pilot assembly.
(b) Check the thermocouple. If faulty replace the pilot assembly.
(c) Check the magnet unit in the gas tap. If faulty replace the tap.
(d) Check the ventilation in the room. Vitiation may be due to lack of sufficient air supply.
(e) Check for satisfactory clearance of combustion products. Vitiation may be due to spillage of combustion products into the room.

Disconnect the pilot feed pipe at the gas tap and the pilot body at the main burner. Pull off the spark lead at the electrode and disconnect the thermocouple nut at the gas tap. Withdraw the pilot complete with pipe. Swap the pipe onto the new pilot and be sure to use the new filter that comes with the pilot. Re-assemble in the fire and make all the connections. Check the operation of the fire.

SHORT LIST OF PARTS

KEY NUMBER	G.C. NUMBER	PART NUMBER	DESCRIPTION
1	144 875	997 044	Dressguard
2	159 653	822187	Gas Tap Assembly
3	144 723	998 426	Gas Tap Knob
4	154 371	995 971	Radiant
5	379 044	822 131	Pilot Filter
6	159 584	992 495	Pilot Assembly (with filter)
7	154 987	993 911	Spark Lead
8	398 319	822 089	Injector
9	159 581	992 505	Control Knob Adaptor (not illustrated)

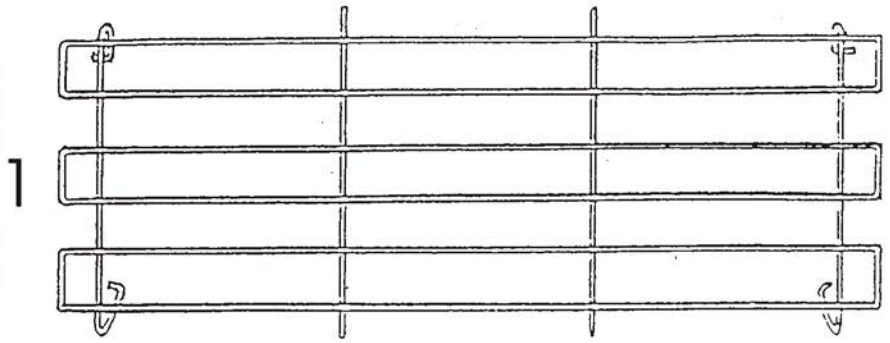

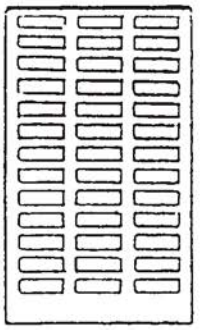

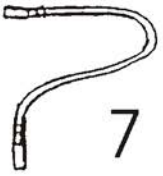

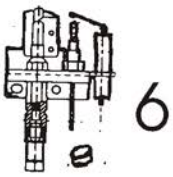

Issue 5
992279

ROBINSON WILLEY LIMITED
Mill Lane
Old Swan
Liverpool L13 4AJ
Telephone: 0151-228 9111
Fax: 0151-228 6661